QuickScan® QS6500

Handheld Bar Code Scanner

Quick Reference Guide

PSC Inc
959 Terry Street
Eugene, Oregon 97402
Telephone: (541) 683-5700
Fax: (541) 345-7140
An Unpublished Work - All rights reserved. No part of the contents of this documentation or the procedures described therein may be reproduced or transmitted in any form or by any means without prior written permission of PSC Inc. or its wholly owned subsidiaries ("PSC"). Owners of PSC products are hereby granted a non-exclusive, revocable license to reproduce and transmit this documentation for the purchaser's own internal business purposes. Purchaser shall not remove or alter any proprietary notices, including copyright notices, contained in this documentation and shall ensure that all notices appear on any reproductions of the documentation.
Should future revisions of this manual be published, you can acquire printed versions by contacting your PSC representative. Electronic versions may either be downloadable from the PSC website (**www.psc.com**) or provided on appropriate media. If you visit our website and would like to make comments or suggestions about this or other PSC publications, please let us know via the "Contact PSC" page.

Disclaimer

PSC has taken reasonable measures to provide information in this manual that is complete and accurate, however, PSC reserves the right to change any specification at any time without prior notice.
PSC is a registered trademark of PSC Inc. The PSC logo is a trademark of PSC. All other trademarks and trade names referred to herein are property of their respective owners.

This product may be covered by one or more of the following patents: 6,293,467 • 6,612,495 • 6,705,527 • Other Patents Pending

PSC INC. QUICKSCAN® END USER LICENSE AGREEMENT

Notice to End User: The PSC Product you have acquired contains embedded Software, which is integral to the product's operation. This Software is being provided to you under license, subject to the terms and conditions of this Agreement. If you use the PSC Product, you will be deemed to have accepted the terms and conditions of this Agreement. If you do not intend to be bound to the terms of this Agreement, PSC is not willing to license the Software to you, you may not use the PSC Product or the Software, and you must contact the party from whom you acquired the PSC Product for instructions.

This End User Software License Agreement ("Agreement") is a legally binding agreement governing the licensing of the Software and Documentation by PSC Inc. and its wholly owned subsidiaries and affiliates ("PSC") to the entity or person who has purchased or otherwise acquired a PSC Product ("End User"). For purposes of this Agreement, any software that is associated with a separate end-user license agreement is licensed to you under the terms of that license agreement. PSC and End User hereby agree as follows:

1. Definitions.

1.1 "Documentation" means materials such as user's guides, program reference guides, quick reference guides, manuals, or similar materials associated with or related to the PSC Product, whether in printed, "online", or other form.

1.2 "Proprietary Information" means: (a) source code, object code, software, documentation, and any related internal design, system design, data base design, algorithms, technology, technical data or information, implementation techniques, and trade secrets related to the Software, (b) any other trade secrets marked appropriately or identified as proprietary or confidential, and (c) any information that End User, under the circumstances, should recognize as confidential. Proprietary Information does not include any information that the receiving party can establish was (1) in the public domain, (2) already in the receiving party's possession or rightfully known prior to receipt, (3) rightfully learned from a third party not in violation of any other's proprietary rights, or (4) independently developed without access to Proprietary Information.

1.3 "PSC Product" means the PSC Quickscan® series scanner product, including all embedded Software in and all Documentation related to such product, which has been purchased or otherwise acquired by End User, whether obtained directly or indirectly from PSC.

1.4 "Software" means any software or computer programs of PSC or its third party licensors in machine readable form which is embedded in the PSC Product, whether obtained directly or indirectly from PSC, including any replacement, update, upgrade, enhancement or modification.

2. Scope Of License Granted.

2.1 PSC grants to End User a non-exclusive, non-transferable, perpetual license to use the Software, solely on the PSC Product in which it is embedded ("designated PSC Product"), in machine-readable form only, solely for End User's internal business purposes. This Agreement does not convey ownership of the Software to End User. Title to the Software shall be and remain with PSC or the third party from whom PSC has obtained a licensed right. As used in this Agreement, the term "purchase" or its equivalents when applied to the Software shall mean "acquire under license." End User is not entitled to receipt or use of the source code to any Software.

2.2 End User shall not copy, modify, decompile, disassemble, reverse engineer, or otherwise reproduce or remanufacture the Software, whether modified or unmodified, nor sell, assign, sublicense, distribute, lend, rent, give, or otherwise transfer the Software to any other person or organization, for purposes other than as expressly provided in this Agreement, without PSC's prior written consent.

3. Transfers, Support.

3.1 Any copying, installing, reproduction, remanufacture, reverse engineering, electronic transfer, or other use of the Software on other than the designated PSC Product will be a

material breach of this Agreement. However, PSC may elect not to terminate this Agreement or the granted licenses, but instead may elect to notify End User that End User is deemed to have ordered and accepted a license for each breaching use. End User shall pay PSC the applicable list price for such licenses as of the date of such breach.

3.2 End User shall not sell, assign, sublicense, distribute, lend, rent, give, or otherwise transfer the PSC Product to any third party unless such third party agrees with PSC in writing to be bound by the terms and conditions of this Agreement. Any such transfer of the PSC Product absent such agreement shall be null and void.

3.3 End User may obtain support for Software from PSC at PSC's standard support fees and under PSC's standard support terms and conditions in effect at the time the support is requested.

4. Intellectual Property.

End User acknowledges that the Software constitutes valuable trade secrets of PSC or PSC's third party licensors and that the Software is protected by intellectual property laws and treaties. The license set forth in this Agreement does not transfer to End User any ownership of PSC's or its third party licensors' copyrights, patents, trademarks, service marks, trade secrets, or other intellectual property rights and End User shall have no right to commence any legal actions to obtain such rights. End User shall not remove, modify, or take any other action that would obscure any copyright, trademark, patent marking, or other intellectual property notices contained in or on the PSC Product.

5. Proprietary Information.

5.1 End User acknowledges that Proprietary Information is the confidential, proprietary, and trade secret property of PSC and PSC's third party licensors and End User acquires no right or interest in any Proprietary Information.

5.2 End User shall not disclose, provide, or otherwise make available the Proprietary Information of PSC or its third party licensors to any person other than End User's authorized employees or agents who are under confidentiality agreement, and End User shall not use the Proprietary Information other than in conjunction with use of the PSC Product exclusively for End User's internal business purposes. End User shall take steps to protect the Proprietary Information no less securely than if it were End User's own intellectual property.

5.3 The provisions of this Proprietary Information Section shall survive and continue for five (5) years after the termination of this Agreement.

6. Limited Warranty.

6.1 PSC warrants that, under normal use and operation, the PSC Product will conform substantially to the applicable Documentation for the period specified in the Documentation. During this period, for all reproducible nonconformities for which PSC has been given written notice, PSC will use commercially reasonable efforts to remedy nonconformities verified by PSC. End User agrees to supply PSC with all reasonably requested information and assistance necessary to help PSC in remedying such nonconformities. For all defects reported to PSC within the warranty period, PSC's liability is limited to providing End User with one copy of corrections or responding to End User's problem reports according to PSC's standard assistance practices. PSC does not warrant that the product will meet End User's requirements or that use of the product will be uninterrupted or error free, or that PSC's remedial efforts will correct any nonconformance. This limited warranty does not cover any product that have been subjected to damage or abuse, whether intentionally, accidentally, or by neglect, or to unauthorized repair or unauthorized installation, and shall be void if End User modifies the product, uses the product in any manner other than as established in the Documentation, or if End User breaches any of the provisions of this Agreement.

6.2 EXCEPT AS PROVIDED IN THIS AGREEMENT, THE PSC PRODUCT IS PROVIDED "AS IS" AND PSC MAKES NO WARRANTIES OF ANY KIND, EXPRESS OR IMPLIED, WRITTEN OR ORAL, WITH RESPECT TO THE PRODUCT, AND SPECIFICALLY DISCLAIMS THE IMPLIED WARRANTIES OF MERCHANTABILITY AND FITNESS FOR A PARTICULAR PURPOSE.

7. Infringement.

7.1 PSC will defend End User against any claim in a lawsuit that the PSC Product furnished hereunder infringe a United States patent or copyright of a third party and PSC will pay any damages finally awarded against End User by a court of competent jurisdiction that

are attributable to such claim or will pay End User's part of any settlement that is attributable to such claim, provided, that 1) End User notifies PSC promptly in writing of the claim, 2) PSC controls the defense or settlement of the claim, and 3) End User cooperates fully with PSC in such defense or settlement. All notices of a claim should be sent to PSC Inc., Legal Department, 111 SW Fifth Ave. Suite 4100, Portland, OR 97204-3644.

7.2 In the defense or settlement of any such claim, PSC may, at its option, 1) procure for End User the right to continue using the PSC Product, 2) modify the PSC Product so that it becomes non-infringing, 3) replace the PSC Product with an equivalent product not subject to such claim, or 4) provide End User an opportunity to return the PSC Product and receive a refund of the purchase price paid, less a reasonable allowance for use.

7.3 PSC shall have no liability to End User for claims of infringement based upon 1) the use of any PSC Product in combination with any product which PSC has not either furnished or authorized for use with such PSC Product 2) the use of any PSC Product designed, manufactured, or modified to the specifications of End User, or 3) End User's modification of the PSC Product without written authorization from PSC.

7.4 THE FOREGOING STATES PSC'S COMPLETE AND ENTIRE OBLIGATION CONCERNING CLAIMS OF PATENT, COPYRIGHT, OR OTHER INTELLECTUAL PROPERTY INFRINGEMENT, CANCELS AND SUPERCEDES ANY PRIOR AGREEMENTS, WHETHER ORAL OR WRITTEN, BETWEEN THE PARTIES CONCERNING SUCH CLAIMS, AND WILL NOT BE MODIFIED OR AMENDED BY ANY PAST, CONTEMPORANEOUS, OR FUTURE AGREEMENTS OR DEALINGS BETWEEN THE PARTIES, WHETHER ORAL OR WRITTEN, EXCEPT AS SET FORTH IN A FUTURE WRITING SIGNED BY BOTH PARTIES.

8. Limitation Of Liability.

EXCEPT AS PROVIDED IN SECTION 7, PSC SHALL NOT BE LIABLE FOR ANY CLAIMS AGAINST END USER BY ANY OTHER PARTY. IN NO EVENT SHALL PSC'S LIABILITY FOR DAMAGES, IF ANY, WHETHER BASED UPON CONTRACT, TORT (INCLUDING NEGLIGENCE), PRODUCT LIABILITY, STRICT LIABILITY, WARRANTY, OR ANY OTHER BASIS, EXCEED THE PRICE OR FEE PAID BY END USER FOR THE PSC PRODUCT. UNDER NO CIRCUMSTANCES SHALL PSC BE LIABLE TO END USER OR ANY THIRD PARTY FOR LOST PROFITS, LOST DATA, INTERRUPTION OF BUSINESS OR SERVICE, OR FOR ANY OTHER SPECIAL, CONSEQUENTIAL, CONTINGENT, INDIRECT, INCIDENTAL, PUNITIVE, EXEMPLARY, OR OTHER SIMILAR DAMAGES, EVEN IF PSC HAS BEEN ADVISED OF THE POSSIBILITY OF SUCH DAMAGES.

9. Government Restricted Rights; International Use.

9.1 Use, duplication, or disclosure of the Software by the U.S. Government is subject to the restrictions for computer software developed at private expense as set forth in the U.S. Federal Acquisition Regulations at FAR 52.227-14(g), or 52.227-19 or in the Rights in Technical Data and Computer Software clause at DFARS 252.227-7013(c)(1)(ii), whichever is applicable.

9.2 If End User is using the PSC Product outside of the United States, End User must comply with the applicable local laws of the country in which the PSC Product is used, with U.S. export control laws, and with the English language version of this Agreement. The provisions of the "United Nations Convention on International Sale of Goods" shall not apply to this Agreement.

10. Termination.

10.1 Either party may terminate this Agreement or any license granted under this Agreement at any time upon written notice if the other party breaches any provision of this Agreement.

10.2 Upon termination of this Agreement, End User immediately shall cease using any non-embedded software and shall return to PSC or destroy all non-embedded software covered by this Agreement, and shall furnish PSC with a certificate of compliance with this provision signed by an officer or authorized representative of End User. For embedded software, End User agrees to sign a waiver prepared by PSC concerning further use of the embedded Software. End User's resumed or continued use of the embedded Software after termination shall constitute End User's agreement to be bound by the terms and conditions of this Agreement for such use.

11. General Provisions.

11.1 Entire Agreement; Amendment. This document contains the entire agreement between

the parties relating to the licensing of the Software and supersedes all prior or contemporaneous agreements, written or oral, between the parties concerning the licensing of the Software. This Agreement may not be changed, amended, or modified except by written document signed by PSC.

11.2 Notice. All notices required or authorized under this Agreement shall be given in writing, and shall be effective when received, with evidence of receipt. Notices to PSC shall be sent to the attention of Contract Administration, PSC Scanning Inc., 959 Terry Street, Eugene, OR 97402, or such other address as may be specified by PSC in writing.

11.3 Waiver. A party's failure to enforce any of the terms and conditions of this Agreement shall not prevent the party's later enforcement of such terms and conditions.

11.4 Governing Law; Venue:This Agreement and the rights of the parties hereunder shall be governed by and construed in accordance with the laws of the State of Oregon U.S.A, without regard to the rules governing conflicts of law. The state or federal courts of the State of Oregon located in either Multnomah or Lane counties shall have exclusive jurisdiction over all matters regarding this Agreement, except that PSC shall have the right, at its absolute discretion, to initiate proceedings in the courts of any other state, country, or territory in which End User resides, or in which any of End User's assets are located.

11.5 Attorneys' Fees. In the event an action is brought to enforce the terms and conditions of this Agreement, the prevailing party shall be entitled to reasonable attorneys' fees, both at trial and on appeal.

- END -

Installation

The QuickScan® QS6500 linear imager is easy to install and use. The following figure shows the steps to perform an installation. Turn off the host computer before connection. Consult the host terminal's manual if necessary.

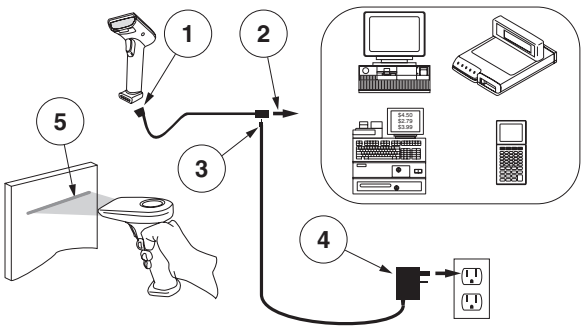

1. Connect the interface (I/F) cable to the linear imager.
2. Connect the I/F cable to the terminal's communication port.
3. Connect the power cord to the I/F cable connector if required. Linear imagers that use power off the terminal (P.O.T.) do not require a power supply.
4. If required, connect the AC adapter to the wall outlet.
5. To verify operation, point the linear imager at a bar code and pull the trigger. The linear imager should emit a single beep indicating that the label has been scanned successfully.

The linear imager installation is complete.

Power Supply

Unit requires either a Listed Class 2 or Listed LPS power source which supplies power directly to the linear imager.

How to Scan

The figure below shows the right and wrong ways to scan a bar code.

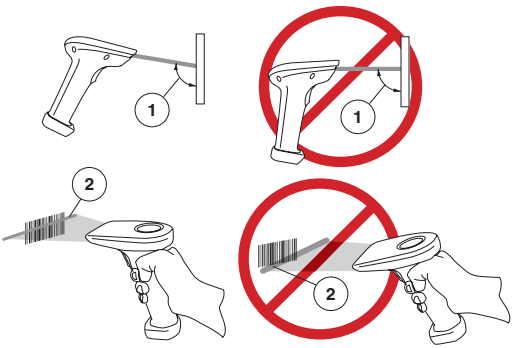

1. The linear imager must be pointed at a slight angle to the bar code so that the light reflected off the bar code can be “seen” by the linear imager. Do not hold the linear imager perpendicular to the bar code.
2. The targeting beam must cross the entire label. The linear imager cannot read the bar code data without seeing the entire label.

Scanning PDF417 Bar Codes (PDF models ONLY)

To read a PDF417 bar code, aim the targeting beam at the top of the bar code, and in a smooth motion, scan down through the bar code. You will hear a series of ticks, followed by a final beep when the bar code’s content has been completely decoded. You may need to repeat this process if the PDF code is hard to read.

Troubleshooting

If the linear imager is not operating properly, the following checks should be performed:

1. Since the linear imager can receive its power from the host computer (Power Off the Terminal—P.O.T.), it will not operate without the system power on. If the linear imager uses an external power supply and the external power supply has failed, the linear imager will not operate.
2. If an external power supply is used, exchange the power supply with a known good power supply and retest the linear imager.
3. If the linear imager receives power from the host (P.O.T.), connect the linear imager to a known good host and retest.

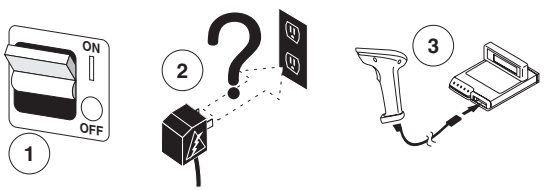

4. Verify that the interface cable is securely attached to the host. Consult your technical support personnel or refer to your host system manual to verify the proper connection for the linear imager.
5. Verify that the interface cable is securely attached to the linear imager.
6. Check that the labels are of sufficient quality to be recognized by the linear imager. Wrinkled, smudged, or torn labels can cause the linear imager to not read at all. Scan a known good label to check the linear imager's read operation.

7. Ensure that the linear imager's interface type is compatible with the host terminal by consulting your POS system manual and/or the linear imager's Product Reference Guide found on the CD included with your linear imager.

If the linear imager still does not function properly, contact your local supplier or PSC Customer Support Services.

Compliance Statement

This device complies with Part 15 rules. Operation is subject to the following conditions:

1. This device may not cause harmful interference; and
2. This device must accept any interference received, including interference that may cause undesired operation.

This Class A digital apparatus complies with Canadian ICES -003.
Cet appareil numérique de la classe A est confrome à la norme NMB-003 du Canada.

LED Class

CLASS 1 LED PRODUCT
LED KLASSE 1

APPARECCHIO LED CLASSE 1
APPAREIL A LED DE CLASSE 1
EN60825-1/All:1996

Installation

Le lecteur de code à barres Linear Imager QS6500 est un linear imager de poche facile à utiliser. Le schéma suivant illustre la procédure d'installation du imager. Eteignez l'ordinateur avant de connecter le imager. Consultez le manuel de l'ordinateur si nécessaire.

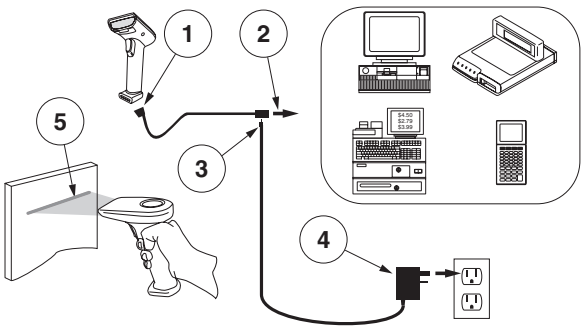

1. Connectez le câble d'interface (I/F) au imager.
2. Connectez le câble I/F au port de communication de l'ordinateur.
3. Connectez le cordon d'alimentation au câble I/F si requis. Les imagers qui sont alimentés par l'ordinateur n'ont pas besoin d'une autre source d'alimentation.
4. Si nécessaire, branchez l'adaptateur CA sur la prise murale.
5. Pour vérifier le fonctionnement, pointez le linear imager sur le code à barres et appuyez sur la gâchette. Le linear imager doit émettre un seul bip indiquant que l'étiquette a été déchiffrée correctement.

L'installation du linear imager est terminée.

Alimentation

Afin d'alimenter directement la QS6500, il est nécessaire d'utiliser soit une alimentation de type Classe 2 ou LPS

Procédure de lecture

Le dessin ci-dessous montre la bonne et la mauvaise façon de scanner un code à barres.

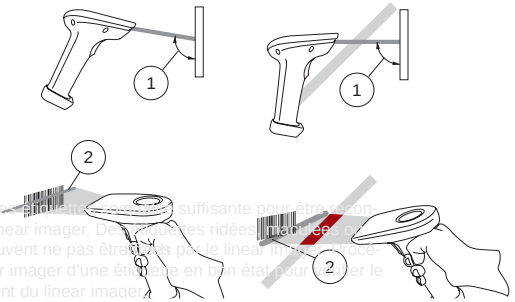

imager.

6. Vérifiez que les étiquettes sont assez suffisante pour être reconnues par le linear imager. Des étiquettes ridées, mouillées ou déchirées peuvent ne pas être lisées par le linear imager. Procédez à la linear imager d'une étiquette en bon état pour vérifier le fonctionnement du linear imager.

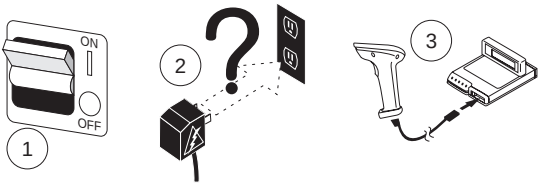

1. Le li au code à barre vue par le linea ement au c
2. Le fa t. Le linear imager ne peut pas déchiffrer le code à barres sans avoir entièrement parcouru l'étiquette.

Lecture des codes à barres PDF 417 (Modèles PDF seulement)

Afin de lire les codes à barres PDF 417, le faisceau lumineux doit balayer le code à barres du haut vers le bas. Vous allez entendre une série de signaux sonores, suivie d'un bip final lorsque le code à barres aura été complètement déchiffré. Vous devez répéter ce processus si le PDF est difficilement lisible.

7. Assurez-vous que le type d'interface du linear imager est compatible avec l'ordinateur, en consultant le manuel de ce dernier et/ou le Guide de référence du linear imager inclus dans le CD fourni avec le lecteur.

Si le linear imager ne fonctionne toujours pas correctement, contactez votre revendeur ou le Service après-vente PSC.

Interference de la Radio Frequence

Cet appareil est conforme au paragraphe 15 du règlement FCC. Les opération sont soumises aux deux conditions suivantes :

1. Cet appareil ne doit pas causer d'interférences nuisibles, et
2. Il doit accepter n'importe quelle interférence reçue, y compris les interférences pouvant provoquer un dysfonctionnement.

Cet appareil numérique de classe 13 est conforme aux normes Canadiennes de réglementation des équipements provoquant des interférences.

Cet appareil numérique de la classe A est confrome à la norme NMB-003 du Canada.

LED Class

CLASS 1 LED PRODUCTAPPARECCHIO LED CLASSE 1

LED KLASSE 1APPAREIL A LED DE CLASSE 1

EN60825-1/All:1996

Installation

Der QS6500 Linear Imager ist ein Handheld Scanner mit benutzerfreundlichem Design. Anhand folgender Abbildung wird in Schritten gezeigt, wie der Scanner installiert werden soll. Schalten Sie den Hostrechner aus, bevor Sie den linear imager anschließen. Falls notwendig, schlagen Sie im Host-Terminal Handbuch nach.

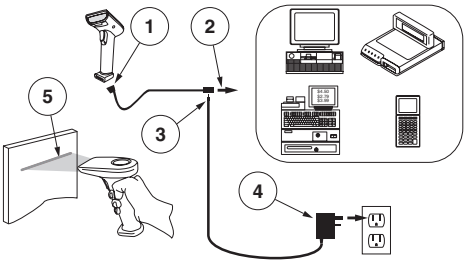

1. Verbinden Sie die Schnittstelle (I/F) mit dem linear imager.
2. Verbinden Sie das I/F Kabel mit dem Datenübertragungsport im Terminal.
3. Falls notwendig, verbinden Sie das Spannungsversorgungskabel mit dem I/F Kabelanschluß. Imager, die das P.O.T Feature (Spannung vom Terminal) verwenden, benötigen keine Spannungsversorgung.
4. Wenn notwendig, stecken Sie den Wechselstromadapter in die Steckdose.
5. Um diese Anwendung zu überprüfen, zielen Sie mit den linear imager auf einen Barcode und drücken Sie zum Scannen den Abzug. Der linear imager sollte ein einzelnes Signal von sich geben, um zu zeigen, dass der Barcode erfolgreich gescannt wurde.

Der linear imager wurde erfolgreich installiert.

Netzteil

Das Gerät benötigt entweder eine der aufgelisteten Class 2 oder LPS Stromquellen, die die Energie direkt zum Linear Imager führt.

Der Vorgang des Scannens selbst

Die untenstehende Zeichnung zeigt, wie man Barcodes richtig und falsch scannt.

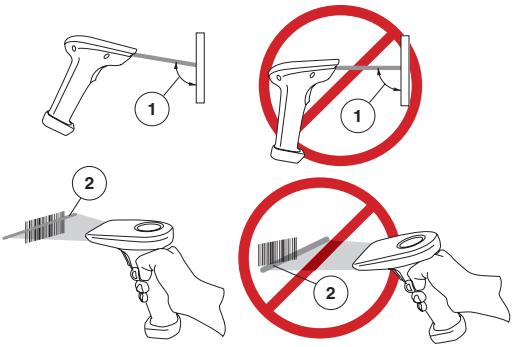

1. Der linear imager muß dem Barcode in einem leichten Winkel zuwandt sein, damit das reflektierte Licht des Barcodes vom Linear Imager erfaßt werden kann. Der linear imager darf nicht rechtwinkelig zum Barcode ausgerichtet sein.
2. Der Scanstrahl muß über den gesamten Barcode gehen.. Der linear imager kann keine Barcodedaten lesen, wenn er nicht den gesamten Barcode erfassen kann.

Das Scannen von PDF417 Barcodes (nur PDF-Modelle)

Um einen PDF417-Barocde zu lesen, richten Sie den Scanstrahl an das obere Ende des Barcodes und scannen Sie den Barcode mit einer flüssigen Bewegung nach unten. Sie werden ein Ticken und anschließend einen Piepton zur Bestätigung hören, wenn der Inhalt des Barcodes vollständig dekodiert wurde. Sie müssen möglicherweise den Prozess wiederholen, wenn der PDF-Code schwer zu lesen ist.

Problembehandlung

Die folgenden Tests sollten durchgeführt werden, wenn der linear imager nicht einwandfrei funktioniert.

1. Nachdem der linear imager durch den Hostrechner mit Strom versorgt wird (P.O.T), kann das Gerät nicht ohne eine eingeschaltete Spannungsversorgung durch das System funktionieren. Der linear imager kann nicht in Betrieb gesetzt werden, wenn das Gerät auf Fremdstrom läuft und dieser ausgefallen ist.
2. Wenn das Gerät mit Fremdstrom läuft, wechseln Sie die Stromversorgung und überprüfen Sie den linear imager nochmals.
3. Sollte der linear imager die Spannung vom Hostrechner erhalten (P.O.T.), schließen Sie den linear imager an einen anderen Host an und überprüfen Sie den linear imager nochmals.

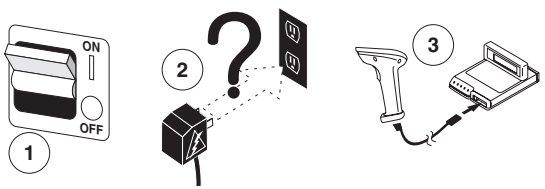

4. Überprüfen Sie, ob das Schnittstellenkabel sicher mit dem linear imager verbunden ist. Setzen Sie sich mit Ihrem technischen Supportteam in Verbindung oder schlagen Sie im Handbuch für Ihr Hostsystem nach, um die einwandfreie Verbindung zum linear imager zu erörtern.
5. Überprüfen Sie, ob das Schnittstellenkabel sicher mit dem linear imager verbunden ist.
6. Überprüfen Sie, ob die Barcodes genügend Qualität aufweisen, damit Sie vom linear imager erfaßt werden können. Zerknitterte, schmutzige oder angerissene Barcodes können dazu führen, dass vom linear imager gar nichts erfaßt werden kann. Scannen Sie einen intakten Barcode, um die Lesefähigkeit des linear imagers zu überprüfen.

7. Stellen Sie sicher, dass der Schnittstellentyp des linear imagers mit Ihrem Host-Terminal kompatibel ist, indem Sie in Ihrem POS-Systemhandbuch und/oder in der linear imager Product Reference Guide nachschlagen, die sich auf der CD befinden, die mit dem linear imager geliefert wurde.

Bitte kontaktieren Sie entweder Ihren örtlichen Anbieter oder den PSC Kunden-Support-Dienst, wenn der linear imager noch immer nicht einwandfrei funktioniert.

Hochfrequente Störungen

Dieses Gerät erfüllt Teil 15 der FCC-Bestimmungen. Der Betrieb unterliegt den folgenden zwei Bedingungen:

1. Dieses Gerät verursacht keine schädlichen Störungen.
2. Dieses Gerät akzeptiert alle empfangenen Störungen, einschließlich Störungen, die einen nicht gewünschten Betrieb verursachen.

Dieser digitale Apparat der Klasse A erfüllt Canadian ICES-003.
Cet appareil numérique de la classe A est confrome à la norme NMB-003 du Canada.

LED Class

CLASS 1 LED PRODUCTAPPARECCHIO LED CLASSE 1

LED KLASSE 1APPAREIL A LED DE CLASSE 1
EN60825-1/All:1996

Installazione

Il QS6500 linear imager è un lettore portatile di facile utilizzo. La seguente figura illustra le fasi di installazione del linear imager. Spegnere il computer prima di collegare il linear imager. Se necessario, consultare il manuale fornito unitamente al computer.

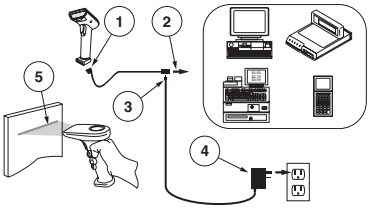

1. Collegare il cavo di interfaccia (I/F) al linear imager.
2. Collegare il cavo di interfaccia (I/F) alla porta di comunicazione del terminale.
3. Se necessario, collegare il cavo di alimentazione al connettore del cavo I/F. I lettori di tipo P.O.T. (Power Off the Terminal) non devono essere alimentati in quanto utilizzano l'alimentazione del terminale.
4. Se necessario, collegare il trasformatore di CA alla presa a muro.
5. Per verificare il funzionamento, puntare il linear imager in direzione di un codice a barre e premere il grilletto. Il linear imager dovrebbe emettere un unico tono per indicare che l'etichetta è stata letta con successo.

L'installazione del linear imager è terminata.

Alimentazione

L'unità richiede sia sorgenti di alimentazione di Classe 2 che LPS che alimentato direttamente il linear imager

Come eseguire una lettura

La figura sottostante illustra il modo corretto e quello non corretto di come effettuare la scansione di un codice a barre

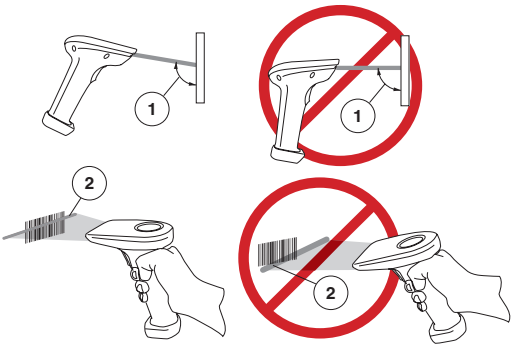

1. Il linear imager deve essere puntato con un leggero angolo rispetto al codice a barre in modo che la luce riflessa dal barcode possa essere "vista" dal linear imager. Non puntare il codice tenendo il linear imager perpendicolare ad esso.
2. Si deve puntare il raggio in modo che esso copra l'intera supperficie del codice a barre. Il linear imager non può leggere i dati del codice a barre senza vedere tutta l'etichetta.

Lettura di codici a barre PDF417 (Solo per i modelli PDF)

Per leggere una simbologia PDF,puntare il raggio in cima al codice a barre, e con movimento lento, attraversare il codice a barre dall'alto verso il basso. Sarà possibile udire una serie di scatti seguiti dal tono finale che viene emesso una volta letto tutto il contenuto del codice. Il processo e' da ripetere se il codice PDF risulta difficile da leggere.

Risoluzione dei problemi

Eseguire i seguenti controlli in caso di cattivo funzionamento del linear imager:

1. Poiché il linear imager è alimentato solo dal terminale (P.O.T. Power Off the Terminal, alimentazione da terminale), esso non funziona quando il sistema è spento. Se il linear imager utilizza un'alimentazione esterna e questa è assente, il linear imager non funziona.
2. In caso di utilizzo di una fonte di alimentazione esterna, sostituirla con una fonte funzionante e controllare nuovamente il linear imager.
3. Se il linear imager viene alimentato dal terminale (P.O.T.), collegarlo ad un terminale funzionante e ripetere il controllo.

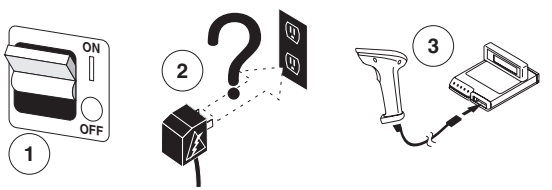

4. Verificare che il cavo di interfaccia sia saldamente collegato al terminale. Consultare il personale di supporto tecnico o il manuale del sistema utilizzato come terminale per verificare il corretto collegamento dello scanner.
5. Verificare che il cavo di interfaccia sia saldamente collegato al linear imager.
6. Verificare che la qualità delle etichette sia adatta al linear imager. Un'etichetta accartocciata, macchiata o strappata può impedire del tutto la lettura. Eseguire una scansione su un'etichetta in buono stato per verificare il corretto funzionamento del linear imager.

7. Assicurarsi che il tipo di interfaccia del linear imager sia compatibile con il terminale consultando il manuale del sistema POS utilizzato e/o la Guida di riferimento prodotto del linear imager presente sul CD fornito con il linear imager.

Se il linear imager continua a non funzionare correttamente, contattare il fornitore locale o il servizio di assistenza clienti di PSC.

Disturbi in radiofrequenza

Questo dispositivo è conforme alla sez. 15 delle norme FCC. L'utilizzo è subordinato alle due condizioni seguenti:

1. Il dispositivo non deve causare interferenze dannose, e
2. Il dispositivo deve sopportare le interferenze captate, incluse quelle che possono determinare un funzionamento anomalo.

Questo dispositivo digitale di Classe A è conforme alle normative canadesi ICES-003.
Cet appareil numérique de la classe A est confrome à la norme NMB-003 du Canada.

LED Class

CLASS 1 LED PRODUCT	APPARECCHIO LED CLASSE 1
LED KLASSE 1	APPAREIL A LED DE CLASSE 1
	EN60825-1/All:1996

Instalación

El QS6500 linear imager para códigos de barras es un escáner manual muy fácil de utilizar. La siguiente figura muestra los pasos que se deben seguir para instalar el escáner. Apague la computadora host antes de conectar el linear imager. De ser necesario, consulte el manual del terminal host.

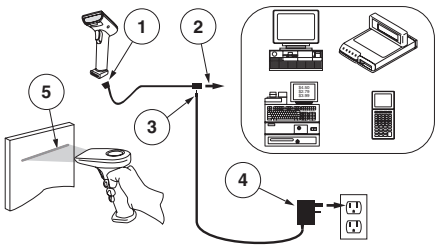

1. Conecte el cable de interfaz (I/F) al linear imager.
2. Conecte el cable I/F al puerto de comunicaciones del terminal.
3. Si corresponde, conecte el cable de alimentación al conector del cable I/F. Los linear imagers que se alimentan con la energía del terminal (P.O.T.) no necesitan a conectar con una fuente de alimentación.
4. Si es necesario, conecte el adaptador CA al tomacorriente de la pared.
5. Para verificar el funcionamiento, apunte el linear imager hacia un código de barras y apriete el gatillo. El linear imager debe emitir un solo bip, lo que indica que ha leído la etiqueta correctamente.

Con esto, queda completa la instalación del linear imager.

Conección al Corriente

El corrriente se dirige directamente de la unidad al "linear imager" para lo cual se requiere conección de la clase índice 2 o bien conección de la índice LPS.

Cómo leer

El diseño que aparece en seguida demuestra la manera correcta e incorrecta de rastrear un código de barras.

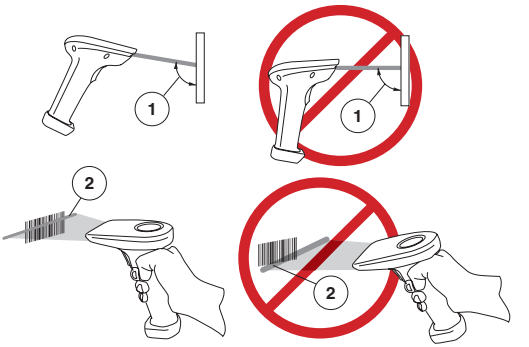

1. Se debe apuntar el "linear imager" con el menor ángulo posible para que la luz que se refleja del código de barras sea captada por el "linear imager." No coloque el linear imager en manera perpendicular al código de barras.
2. La luz directiva tiene que cruzar al totalidad del código de barras. El linear imager no puede leer los datos del código de barras si no ve la etiqueta completo.

Cómo escanear códigos de barras PDF417 (Unicamente para los modelos PDF)

Para la lectura de un código de barras PDF417, apunta la luz directiva por el código de barra con movimiento constante, desde arriba hacia abajo. Deber oír una serie de tics, seguidos con un bip final cuando el linear imager haya descifrado completamente el contenido del código. Puede que usted necesite repetir este proceso, si el código PDF es difícil de leer.

Solución de problemas

Si el linear imager no funcíona adecuadamente, se deben realizar estas pruebras:

1. Dado que el linear imager puede alimentarse de la computadora host (Alimentación a través de la energía del terminal, “P.O.T.”), no funcionará si el sistema no está encendido. Si el linear imager emplea una fuente de alimentación externa y esta fuente ha sufrido una falla operativa, el linear imager no funcionará.
2. Si se utiliza una fuente de alimentación externa, reemplácela por una fuente de alimentación que esté funcionando bien y vuelva a probar el linear imager.
3. Si el linear imager se alimenta con el terminal host (P.O.T.), conecte el linear imager a un host que esté funcionando bien y vuelva a probarlo.

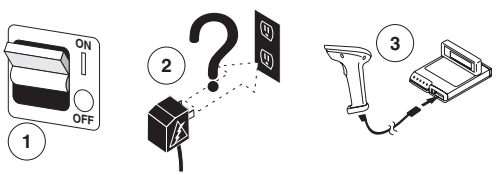

4. Verifique si el cable de interfaz está bien conectado al host. Consulte a su personal de soporte técnico o consulte el manual del sistema host para verificar si el linear imager está bien conectado.
5. Verifique si el cable de interfaz está bien conectado al linear imager.
6. Controle si la calidad de las etiquetas es suficiente para que el linear imager pueda reconocerlas. Es posible que el linear imager no lea las etiquetas que están arrugadas, manchadas o rotas. Para verificar si el linear imager lee correctamente, páselo por una etiqueta que esté en buenas condiciones.
7. Verifique que el tipo de interfaz que emplea el linear imager sea compatible con el terminal host. Para esto, consulte el manual de su

sistema de punto de venta (POS) o la guía de referencia de producto que viene en el CD provisto con el escaner.

Si el linear imager no funciona de manera adecuado, comuníquese con su proveedor local o con el Servicio de Atención al Cliente de PSC.

Interferencia de radio frecuencia

Este unidad cumple con la Parte 15 de las Normas FCC (Comisión Federal de Comunicaciones de EE.UU.). Su funcionamiento está sujeto a las dos condiciones siguientes:

1. Esta unidad no podrá causar interferencia peligrosa, y
2. Esta unidad deberá aceptar cualquier interferencia recibida, incluyendo aquella interferencia que pudiese provocar una operación no deseada.

Este aparato digital de la clase A se conforma con ICES-003 canadiense.

Cet appareil numérique de la classe A est confrome à la norme NMB-003 du Canada.

LED Class

CLASS 1 LED PRODUCTAPPARECCHIO LED CLASSE 1

LED KLASSE 1APPAREIL A LED DE CLASSE 1

EN60825-1/All:1996

Instalação

O QS6500 linear imager é um leitor portátil de fácil utilização. A figura seguinte mostra os passos para instalação do linear imager. Desligue o computador antes de conectar o linear imager. Consulte o manual do terminal caso necessário.

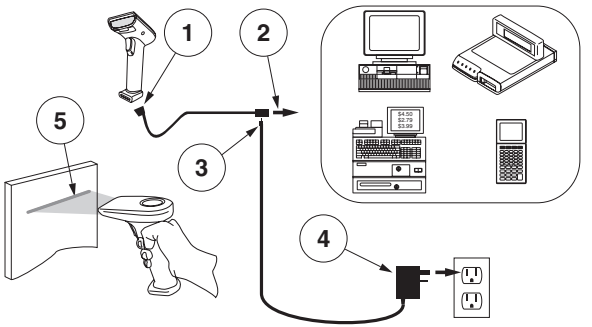

1. Conecte o cabo de interface (I/F) ao linear imager.
2. Conecte o cabo I/F à porta de comunicação do terminal.
3. Conecte o fio de energia ao conector do cabo I/F, caso necessário. Os linear imagers que usam o fornecimento de energia do terminal (power off the terminal - P.O.T.) não exigem um suprimento de energia.
4. Se necessário, conecte o adaptador CA/CC a tomada.
5. Para verificar a operação, aponte o linear imager para um código de barras e aperte o gatilho. O linear imager deve emitir um sinal de bip único, indicando que a etiqueta foi lida corretamente.

A instalação do linear imager está completa.

Adaptador CA/CC

A unidade requer um adaptador Classe 2 ou LPS para suprir energia diretamente ao linear imager.

A figura baixo indica as formas correta e incorreta de ler um código de barras.

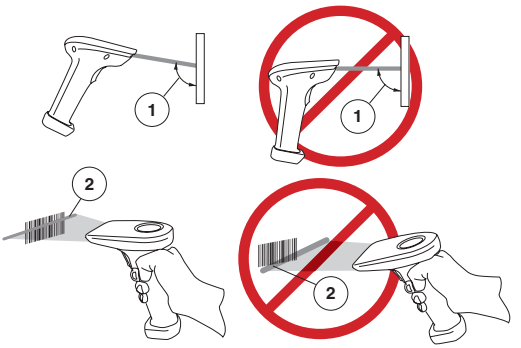

1. O Linear Imager necessita ser direcionado ao código de barras com um pequeno angulo, de forma que a luz que reflete na superfície do código de barras possa ser "vista" pelo Linear Imager. Não segure o linear imager perpendicularmente ao código de barras.
2. O feixe de posicionamento necessita cruzar toda a extensão do código de barras. O linear imager não pode ler o código de barras sem visualizar a etiqueta inteira.

Fazendo de leitura de Códigos de Barras PDF417 (Sómente modelos PDF)

Para ler um codigo do tipo PDF417, aponte o feixe de posicionamento no topo do código e em um movimento devagar siga lendo o código da parte superior até a parte inferior. Você irá ouvir uma série de tiques, seguidos por um bip final, quando o conteúdo do código de barras tiver sido completamente decodificado. Pode ser que seja necessario repetir este processo caso tenha dificuldade de ler este codigo em PDF

Diagnóstico de Problemas

Se o linear imager não estiver operando adequadamente, as seguintes verificações devem ser feitas:

1. Visto que o linear imager pode receber sua energia do terminal que o hospeda (Power Off the Terminal—P.O.T.), este não irá operar sem que o sistema esteja ligado. Se o linear imager usa um suprimento de energia externo e este tiver falho, o linear imager não irá funcionar.
2. Se um suprimento de energia externo for usado, troque o suprimento de energia por um reconhecidamente bom e teste novamente o linear imager.
3. Se o linear imager recebe a energia do terminal (P.O.T.), conecte o linear imager a um terminal reconhecidamente bom e teste novamente.

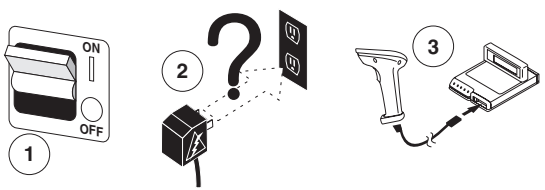

4. Verifique se o cabo de interface está ligado de forma segura ao terminal. Consulte seu suporte técnico ou o manual do sistema do terminal para verificar a conexão apropriada para o linear imager.
5. Verifique se o cabo de interface está ligado de forma segura ao linear imager.
6. Cheque se as etiquetas são de qualidade suficiente para serem reconhecidas pelo linear imager. Etiquetas rasgadas, sujas ou molhadas podem impedir que o linear imager faça a leitura completa. Faça a leitura com uma etiqueta reconhecidamente em bom estado para checar a operação de leitura do linear imager.
7. Certifique-se de que o tipo de interface do linear imager é compatível com o terminal, consultando o manual de sistema POS e/ou

o Guia de Referência do Produto do linear imager, encontrado no CD incluso em seu linear imager.

Caso o linear imager ainda não funcione corretamente, contate seu fornecedor local ou os Serviços de Suporte ao Cliente PSC.

Interferência de Radio — Frequência

Este dispositivo concorda com a Parte 15 das Regras FCC. A operação é sujeita às seguintes duas condições:

1. Este dispositivo não deve causar interferências que tragam risco, e
2. Este dispositivo deve aceitar quaisquer interferências recebidas, incluindo interferências que possam causar operações não desejadas.

Este aparelho digital de Classe A é conforme a norma Canadense ICES-003.

Cet appareil numérique de la classe A est confrome à la norme NMB-003 du Canada.

Classe Do LED

PRODUTO LED - CLASSE 1

CLASS 1 LED PRODUCTAPPARECCHIO LED CLASSE 1

LED KLASSE 1APPAREIL A LED DE CLASSE 1
EN60825-1/All:1996

安装

QuickScan® QS6500 线性扫描器安装和使用都十分容易。下面的图演示的是安装步骤。在接线前首先关闭主计算机。如果需要，请查阅主机终端手册。

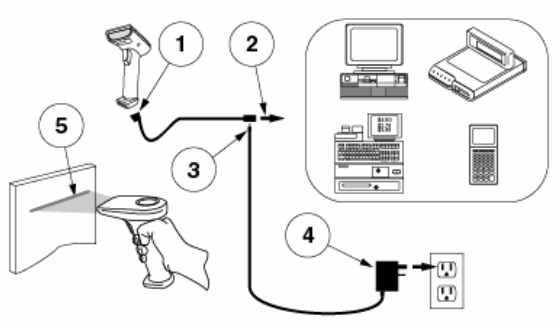

1. 将连接电缆与线性扫描器相连。
2. 将连接电缆与终端的通讯口相连。
3. 如果需要，将电源线与连接电缆的连接器相连。使用使用终端供给电源(P.O.T.) 的线性扫描器不需要电源。
4. 如果需要，将交流电适配器与墙面插头相连。
5. 要检查操作情况，将线性扫描器对准条形码，然后扣动按钮。线性扫描器应当发出一声“滴”音，表明条码扫描成功。

至此，线性扫描器安装完毕。

关于电源

设备需要Listed Class 2 或Listed LPS
电源，直接向线性扫描器输送电力。

如何扫描

下图演示的是正确的和错误的扫描条码的方法。

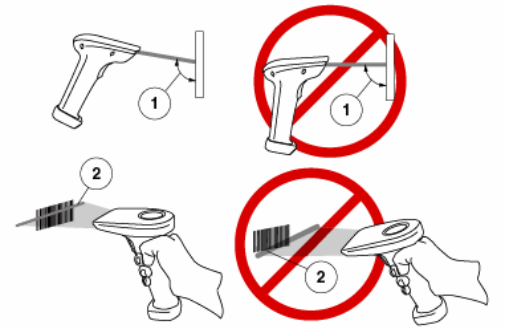

1. 必须将线性扫描器以稍小的斜角对着条码扫描，这样条码上反射的光才可以被线性扫描器“看到”。不要将扫描器垂直对着条码。
2. 扫描光线应当对准整个条码标签，否则扫描器不能读取条码数据。

扫描PDF417 条码（ 仅适用于PDF 机型）

要扫描PDF417 条码，将扫描光线对准条码的顶部，然后平滑地向下扫描条码。在一系列的滴答声后，有一声“滴”，确认条码内容被完全解码。你可能需要扫描条码标签几次。

故障排除

如果线性扫描器出现故障，应当作如下的检查：

1. 由于线性扫描器从主计算机(终端供给电源P.O.T.)
   上获得电力，如果系统电源没有接通，则扫描
   器就不能工作。 如果线性扫描器使用外部电源，而外
   部电源出现故障，则扫描器也不会工作。如果使用的
   是外部电源，换上完好的电源，然后测试线性扫描器。
2. 如果线性扫描器是从主机 (P.O.T.)获得电力，将线性扫
   描器与完好的主机相连，然后测试扫描器是否工作。

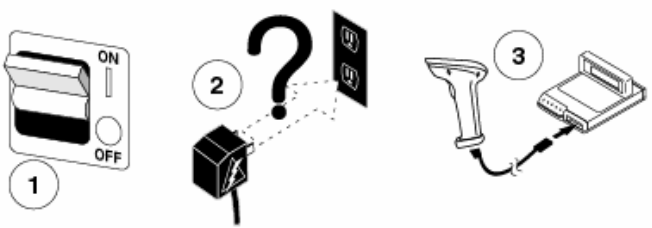

3. 检查连接电缆与主机连接的是否牢固。请教技术支持人员或
   查阅主机系统手册，以检查线性扫描器的接线是否正确。
4. 检查连接电缆与线性扫描器的连接是否牢固。
5. 检查条码是否足够清晰、易于扫描器识别。皱的、脏的或破
   损的条码标签扫描器是不能识别的。扫描一个好的条码，然
   后检查扫描器是否能正确读取。
6. 通过查阅您的POS系统手册或随机携带的CD
   中包含的线性扫描器《产品参考手册》，确认线性扫描器的
   连接线型号与主机终端兼容。

如果线性扫描器仍然不能工作，与您当地的供应商或PSC的客户服务部联系。

符合法规之声明

该设备符合第15 章的有关规定。其操作符合下列条件：

1. 该设备不会引发有害的干扰；并且
2. 该设备必须接受任何接收到的干扰，包括可能引发错误的干扰。

该**A** 级数字设备符合加拿大 **ICES -003。**

Cet appareil numérique de la classe A est confrome à la norme NMB-003 du Canada.

LED 等级

1 级 LED 产品
LED KLASSE 1

1 级APPARECCHIO LED
APPAREIL A LED DE CLASSE 1
EN60825-1/All:1996

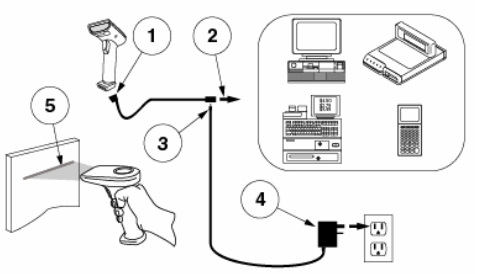

1. (I/F)

2. (I/F)

3. I/F
(P.O.T.)

4. AC

5.

6.

Listed

Class 2 Listed LPS

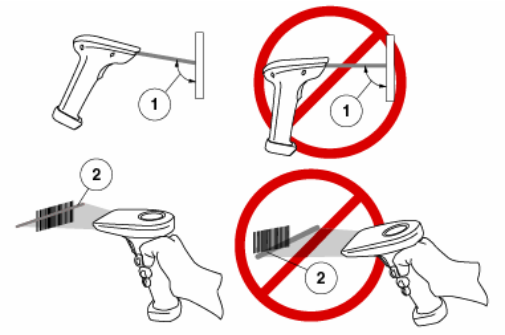

1.

2.

PDF417 (PDF)

PDF417

1. (
-
P.O.T.)

2.

3. (P.O.T.)

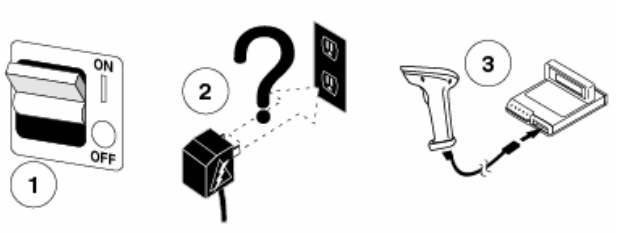

4.

5.

6.

7.

PO

S /

CD

PSC

15

1.
2.

ICES - 003

Cet appareil numérique de la classe A est confrome à la norme NMB-003 du Canada.

LED Class

CLASS 1 LED PRODUCTAPPARECCHIO LED CLASSE 1
LED KLASSE 1APPAREIL A LED DE CLASSE 1
EN60825-1/All:1996

PSC Inc. hereby declares that the equipment specified below has been tested and found compliant to the following directives and standards.

EU Directives

89/336/EEC EMC
73/23/EEC Low Voltage
76/769/EC Hazardous

Standards

EMC:	FCC part 15B Class B:2003 (US) ICES-003 Class B:1997 (Canada) VCCI Class B:2001 (Japan) EN 55022 Class B:1998 (EU) CNS 13438 Class B:1997 (Taiwain) AS/NZS 3548 Class B:1998 GOST EMC approved (Russia) CISPR 22 Class B:1992/1997 (World)
Product Safety:	UL 60950-1:2000 (US) CSA 60950-00 (Canada) EN 60950-2000 (Europe) EN 60825-1/A2:2001 (EU) IEC 60950-1:2001 (World) IEC 60825-1:2001 (World) NOM:1994 (Mexico)
Immunity:	EN55024:1998/2001 - ITE (EU) EN 61000-3-2:2000 - Harmonic Current (EU) EN 61000-3-:1994 - Voltage Flicker (EU)
Quality Systems:	ISO 9001:2000 BS EN ISO 9001:2000
Power Supply (optional):	UL 60950 (US) CSA 60950 (Canada) EN 60950/IEC 60950 (World)
Equipment Type:	Barcode Scanning
Product Model Name:	QuickScan® QS6500

Serial Number Start Sequence: A7xxxxxx

Date Placed into EU Service: November 2004

Responsible Manufacturer: PSC Inc./PSC Scanning, Inc.

Asia Pacific
PSC Hong Kong
Hong Kong
Telephone: [852]-2-584-6210
Fax: [852]-2-521-0291

Australia
PSC Asia Pacific Pty Ltd.
North Ryde, Australia
Telephone: [61] 0 (2) 9878 8999
Fax: [61] 0 (2) 9878 8688

France
PSC S.A.R.L.
LES ULIS Cedex, France
Telephone: [33].01.64.86.71.00
Fax: [33].01.64 46.72.44

Germany
PSC GmbH
Darmstadt, Germany
Telephone: 49 (0) 61 51/93 58-0
Fax: 49 (0) 61 51/93 58 58

Italy
PSC S.p.A.
Vimercate (MI), Italy
Telephone: [39] (0) 39/62903.1
Fax: [39] (0) 39/6859496

Japan
PSC Japan K.K.
Shinagawa-ku, Tokyo, Japan
Telephone: 81 (0)3 3491 6761
Fax: 81 (0)3 3491 6656

Latin America
PSC S.A., INC.
Miami, Florida, USA
Telephone: (305) 591-3222
Fax: (305) 591-3007

United Kingdom
PSC Bar Code Ltd.
Watford, England
Telephone: 44 (0) 1923 809500
Fax: 44 (0) 1923 809 505

www.psc.com

PSC Inc.
959 Terry Street
Eugene, OR 97402
Telephone: (541) 683-5700

©2004-2006 PSC R44-2466 (Rev. B) 3/06